# GROUP 3 PRESENTATION

## CE 72.12: FINITE ELEMENT METHOD IN ENGINEERING

Titiwut Takhao
Thanaboon Dilokritdamrong
Avik Poudel
Diane Lane Burlaos Arribal

# OBJECTIVE

- Develop a Finite Element Method (FEM) implementation for the structural analysis of a nonlinear frame structure using hexahedral elements.

The project aims to:

- Development of a customized In-house **Finite Element Solver** within the **MATLAB** environment for complex 3D structural analysis.
- Emphasis on **Material Non-linearity** where material strength undergoes stiffness degradation under monotonic lateral loading conditions.
- Implementation of Isoparametric Mapping to transform physical geometries into natural coordinates ($\xi$, $\eta$, $\zeta$) for precise numerical integration.
- Validate the developed FEM implementation by comparing the results with ANSYS simulations.

# METHODOLOGY

## I. STRUCTURE

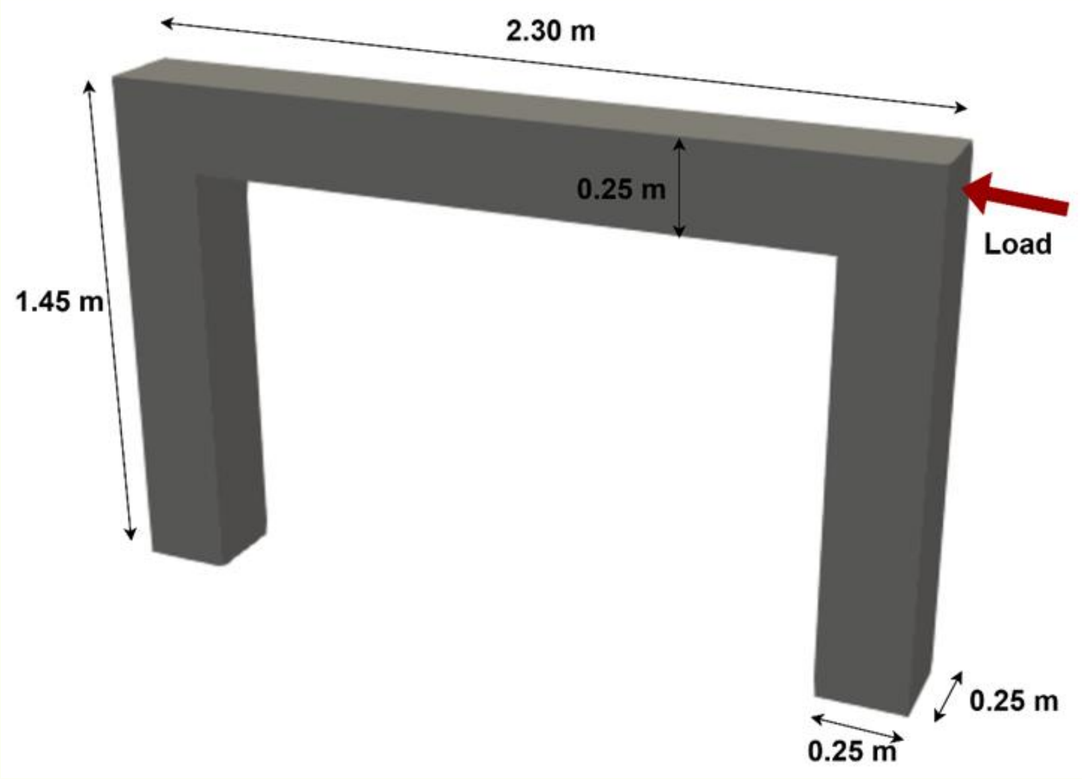


## II.Proposed Element

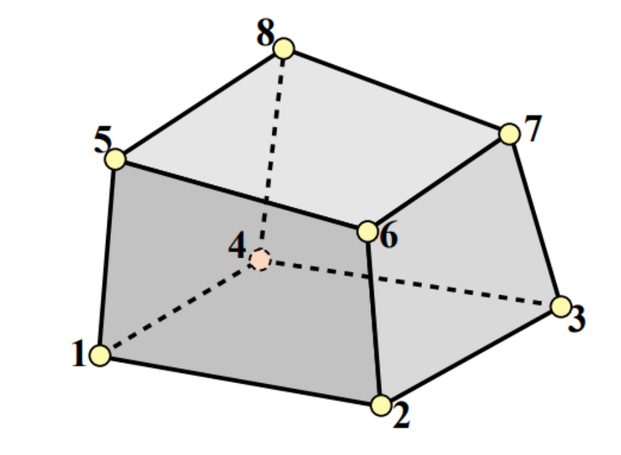


8-node Hex Element

The shape functions are

$$N_1^e = \frac{1}{8}(1-\xi)(1-\eta)(1-\mu), \qquad N_2^e = \frac{1}{8}(1+\xi)(1-\eta)(1-\mu),$$
$$N_3^e = \frac{1}{8}(1+\xi)(1+\eta)(1-\mu), \qquad N_4^e = \frac{1}{8}(1-\xi)(1+\eta)(1-\mu),$$
$$N_5^e = \frac{1}{8}(1-\xi)(1-\eta)(1+\mu), \qquad N_6^e = \frac{1}{8}(1+\xi)(1-\eta)(1+\mu),$$
$$N_7^e = \frac{1}{8}(1+\xi)(1+\eta)(1+\mu), \qquad N_8^e = \frac{1}{8}(1-\xi)(1+\eta)(1+\mu)$$

# METHODOLOGY

## MATLAB

### II. ELEMENT AND MESHING TECHNOLOGY

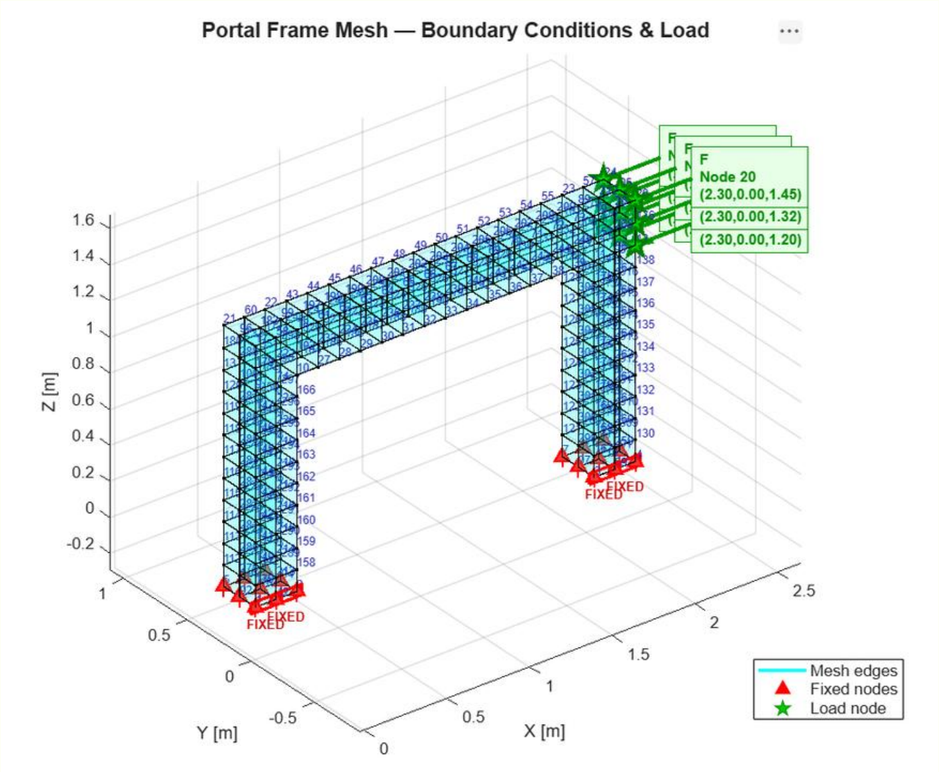


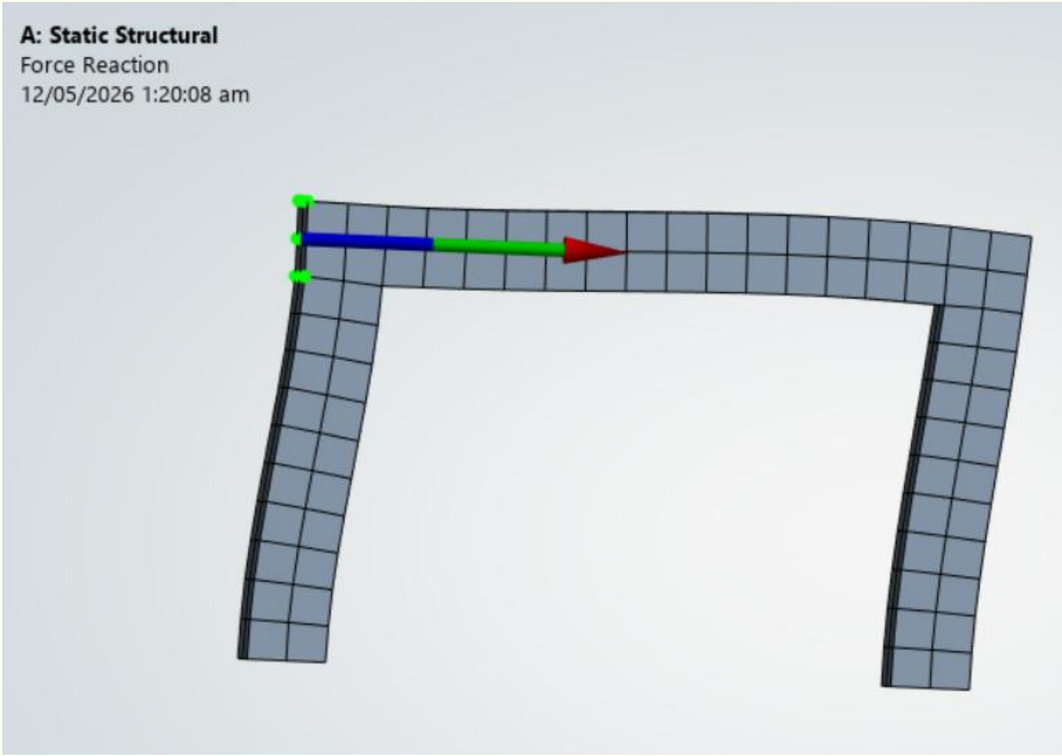


- USING 8-NODE HEXAHEDRON ELEMENT
- GMSH INTEGRATION

# METHODOLOGY

## MATLAB

### III. MATERIAL CHARACTERIZATION

- E = 30 GPa
- Poisson's Ratio = 0.18
- σmax = 35 MPa

Hyperbolic Stress-Strain Model

$$\sigma = \frac{E_0 \varepsilon}{1 + \frac{E_0 \varepsilon}{\sigma_{\mathrm{MAX}}}}$$

### IV. MONOTONIC LOADING

displacement = 0.04h = 58 mm

h = 1.45 m

Force applied = 2150 kN

## ANSYS

- E = 30 GPa
- Poisson's Ratio = 0.18
- Bulk Modulus = 15.6 GPa
- Shear Modulus = 12.7 GPa

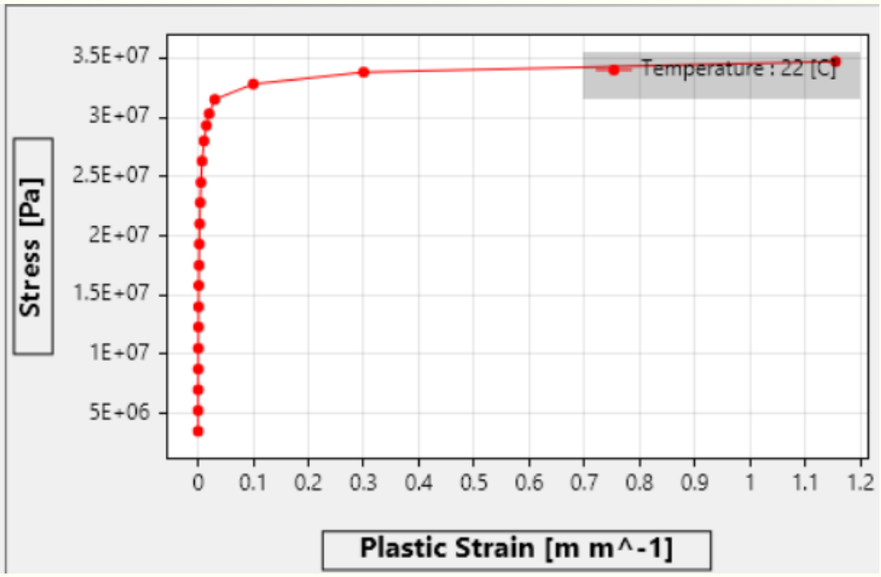

# METHODOLOGY

## MATLAB

### V. NUMERICAL SOLUTION STRATEGY

- PURE-INCREMENTAL ITERATION
- INCREMENTAL LOADING
- GAUSSIAN QUADRATURE

$$E_{tan} = \frac{d\sigma}{d\epsilon} = \frac{E_0}{(1 + \frac{E_0 \epsilon}{\sigma_{max}})^2}$$

### VI. VERIFICATION AND PERFORMANCE

- CODE VECTORIZATION: OPTIMIZING THE MATLAB ARCHITECTURE
- BENCHMARKING RESULTS WITH ANSYS

# Pure Incremental Method

- Load increment : $\Delta F = F_total / nSteps$
- Linear solve per step : $K(u) \cdot \Delta u = \Delta F$
- Displacement update : $un+1 = un + \Delta u$

## Algorithm Logic

- Set u = 0, initialize element E-tan = $E_0$ at all Gauss points. Compute constant ΔF.
- Load step Loop: Build Tangent Stiffness-> solve SΔu-> Update u → Update material state (Strain, Stress, Tangent Modulus and
- Stop criteria — checked after every step : U-monitorrd Node>U-limit -> stop(Program limit reached)

# FLOW CHART

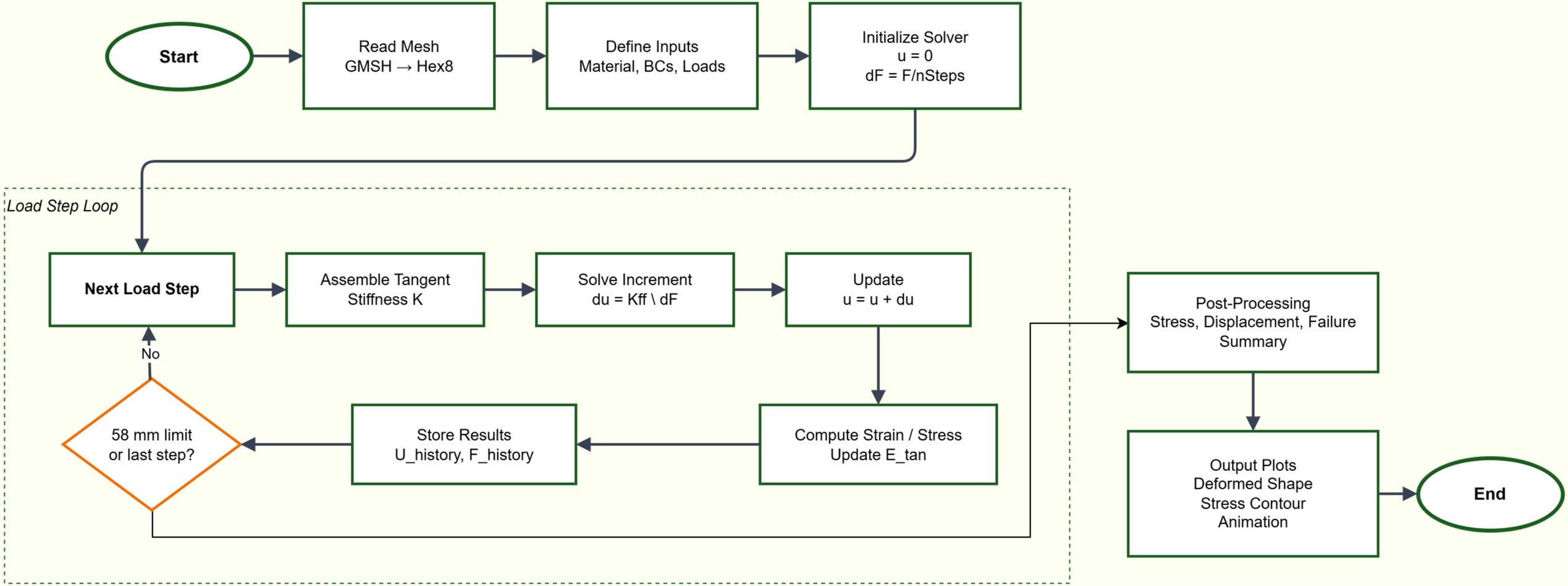
Start
Read Mesh
GMSH → Hex8
Define Inputs
Material, BCs, Loads
Initialize Solver
u = 0
dF = F/nSteps
Load Step Loop
Next Load Step
Assemble Tangent
Stiffness K
Solve Increment
du = Kff \ dF
Update
u = u + du
Compute Strain / Stress
Update E_tan
Store Results
U_history, F_history
58 mm limit
or last step?
No
Post-Processing
Stress, Displacement, Failure
Summary
Output Plots
Deformed Shape
Stress Contour
Animation
End

# RESULTS AND DISCUSSION

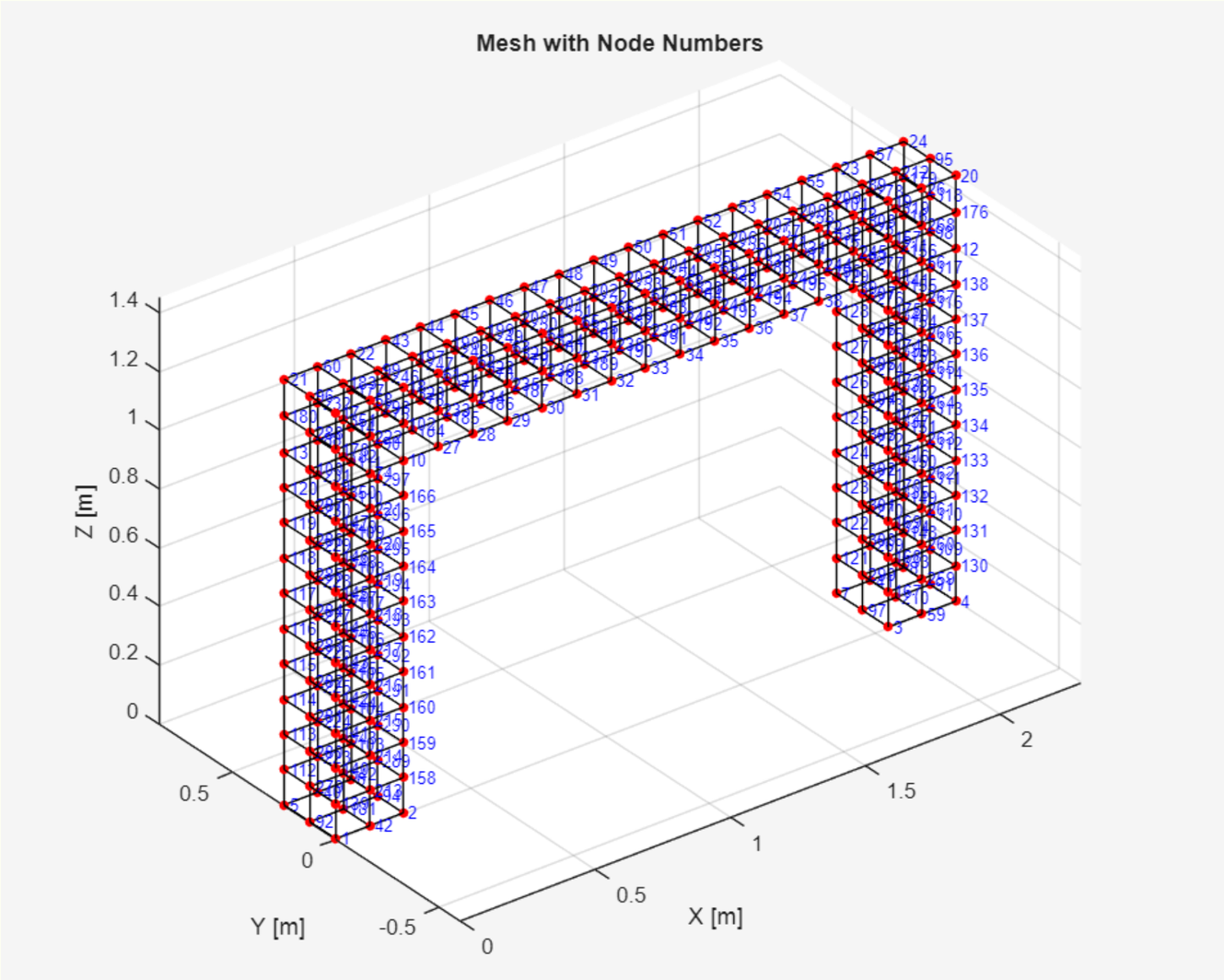


Mesh with Node number

- Total Nodes: 351
- Total Hex8 elements: 152
- Nodes: 351
- Elements : 152
- DOFs: 1053
- Fixed nodes : 18

# RESULTS AND DISCUSSION

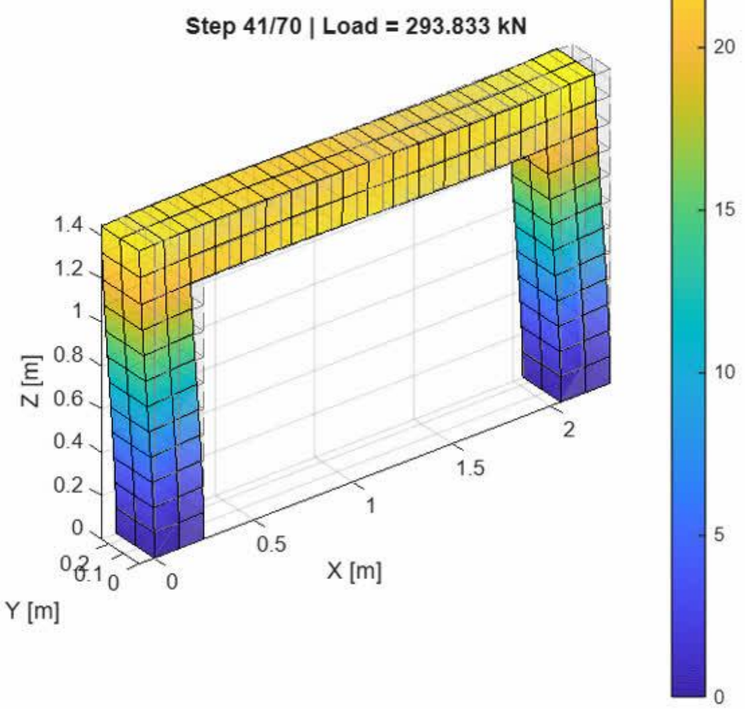


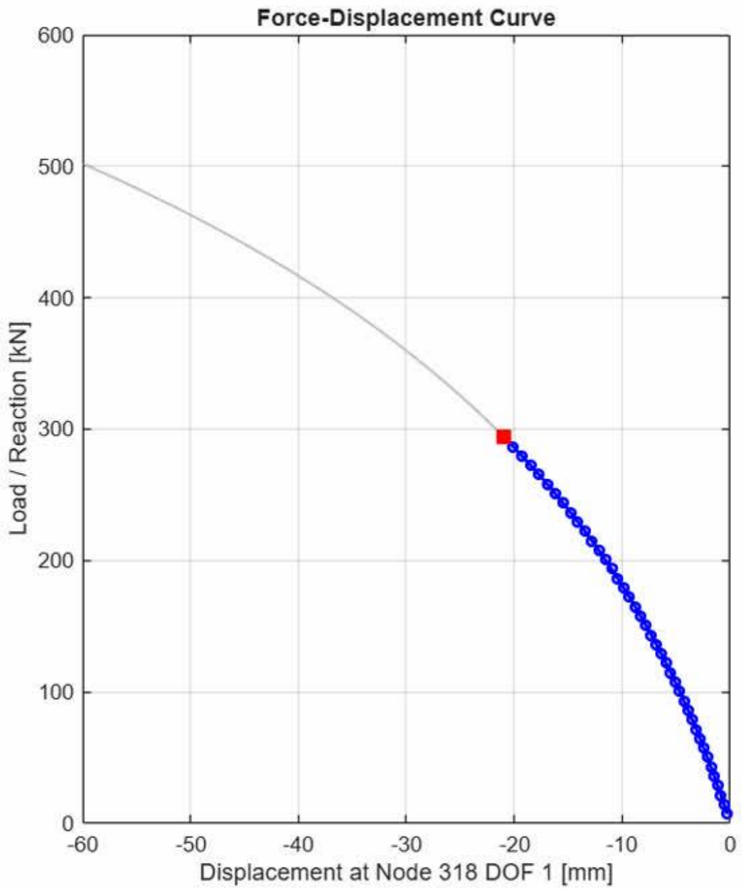


Results

- Maximum Load = 501.667 kN
- Maximum displacement = 58 mm

# RESULTS AND DISCUSSION

## Deformation from MATLAB

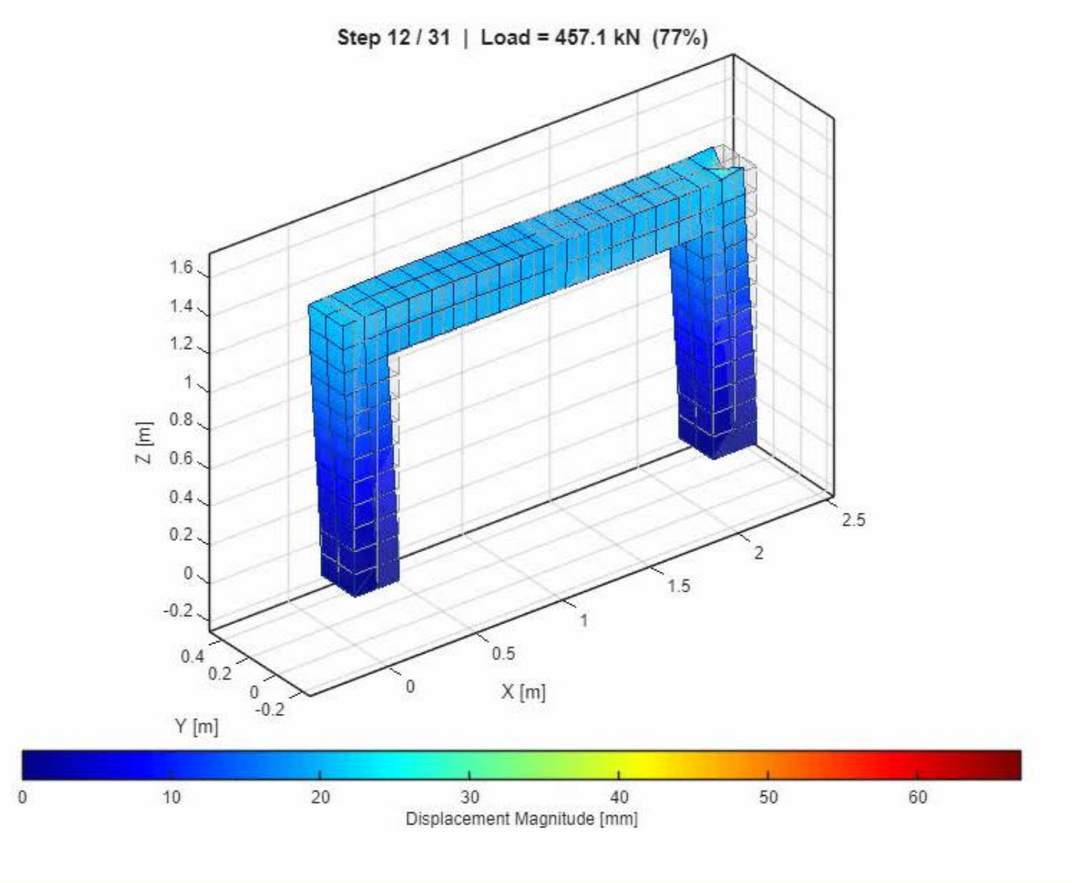


## Deformation from Ansys

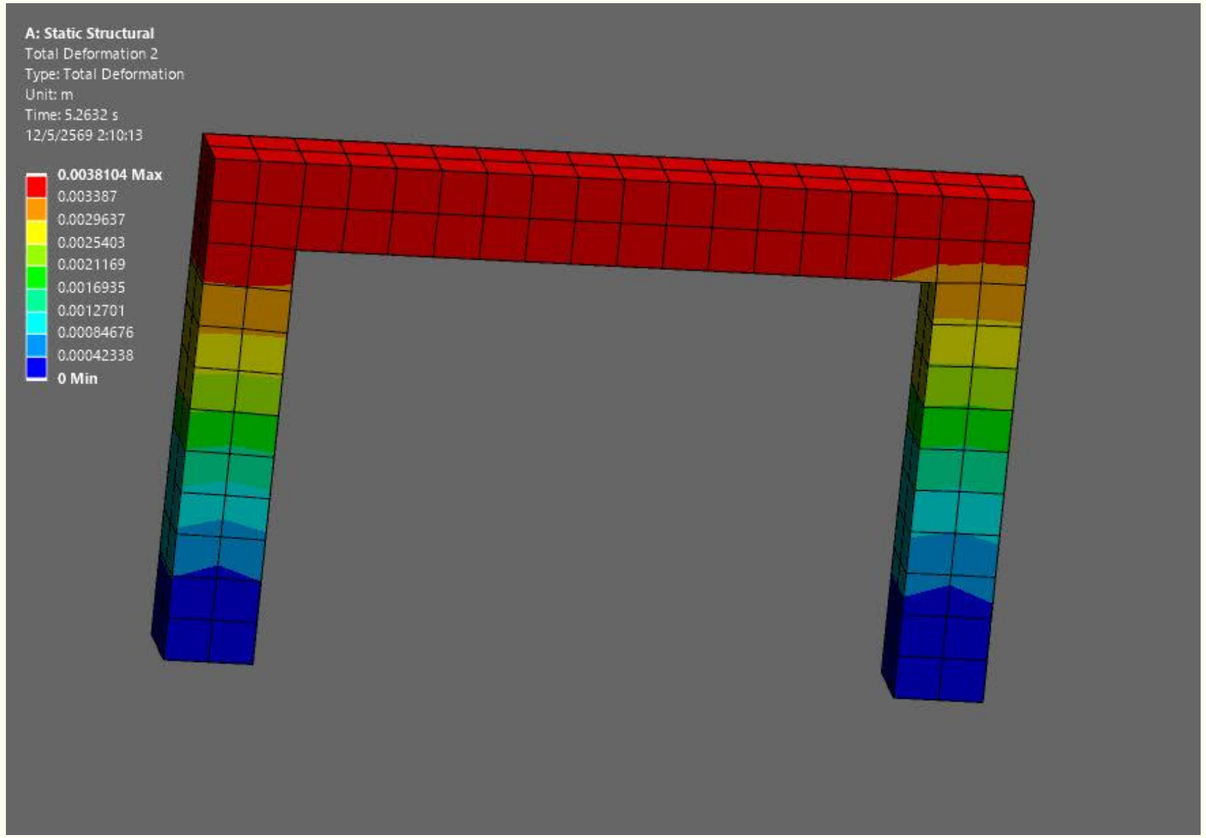


Controlled Deformation 58 mm

# RESULTS AND DISCUSSION

## DISPLACEMENT

- Both models exhibited lateral sway deformation due to the prescribed horizontal loading.
- The maximum displacement occurred near the upper beam region and beam-column joint in both MATLAB and ANSYS results.

Differences in displacement magnitude and contour smoothness may be due to:

- mesh discretization,
- differences in interpolation and element formulation between MATLAB and ANSYS.

# RESULTS AND DISCUSSION

## Stress from MATLAB

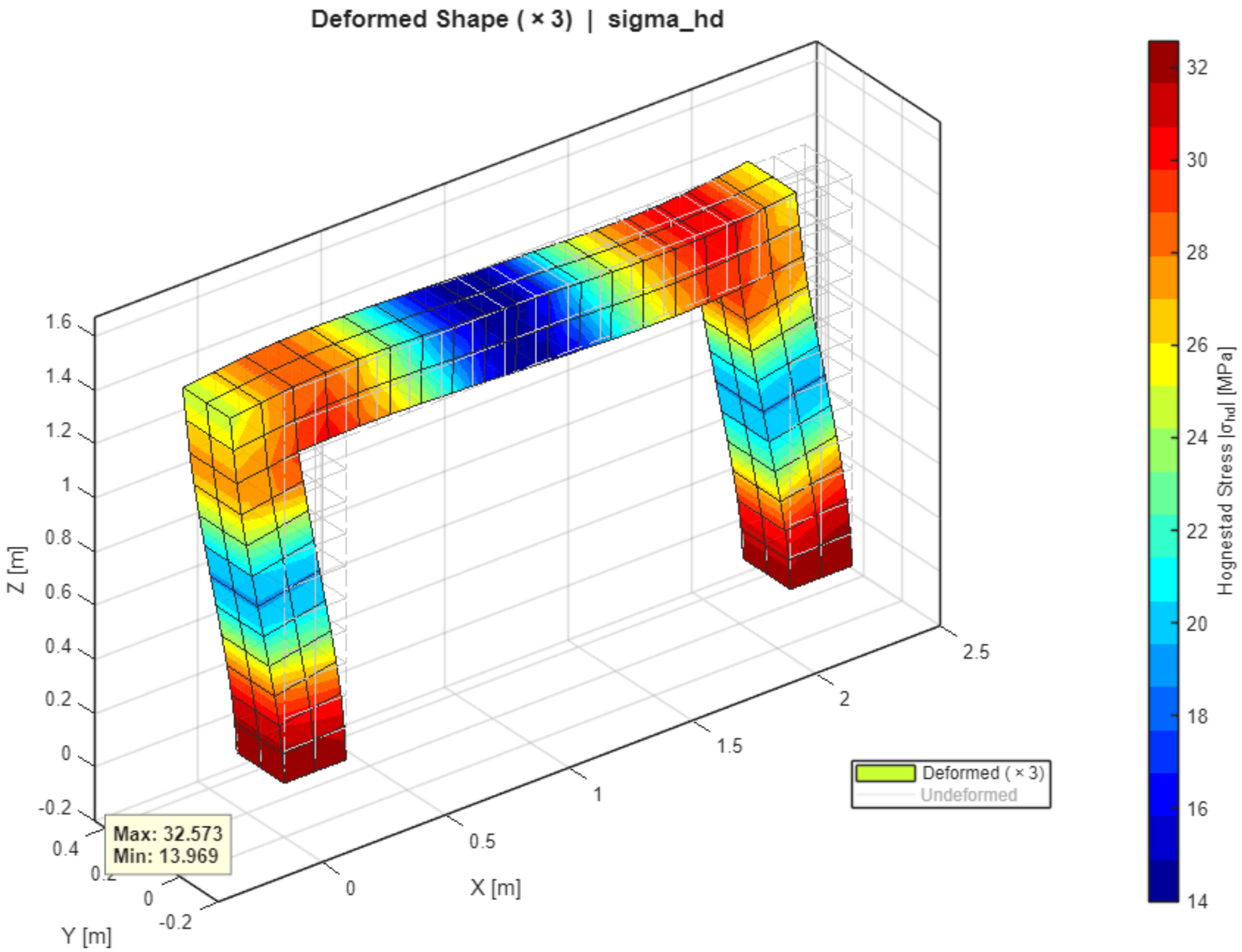

# RESULTS AND DISCUSSION

## Stress from Ansys

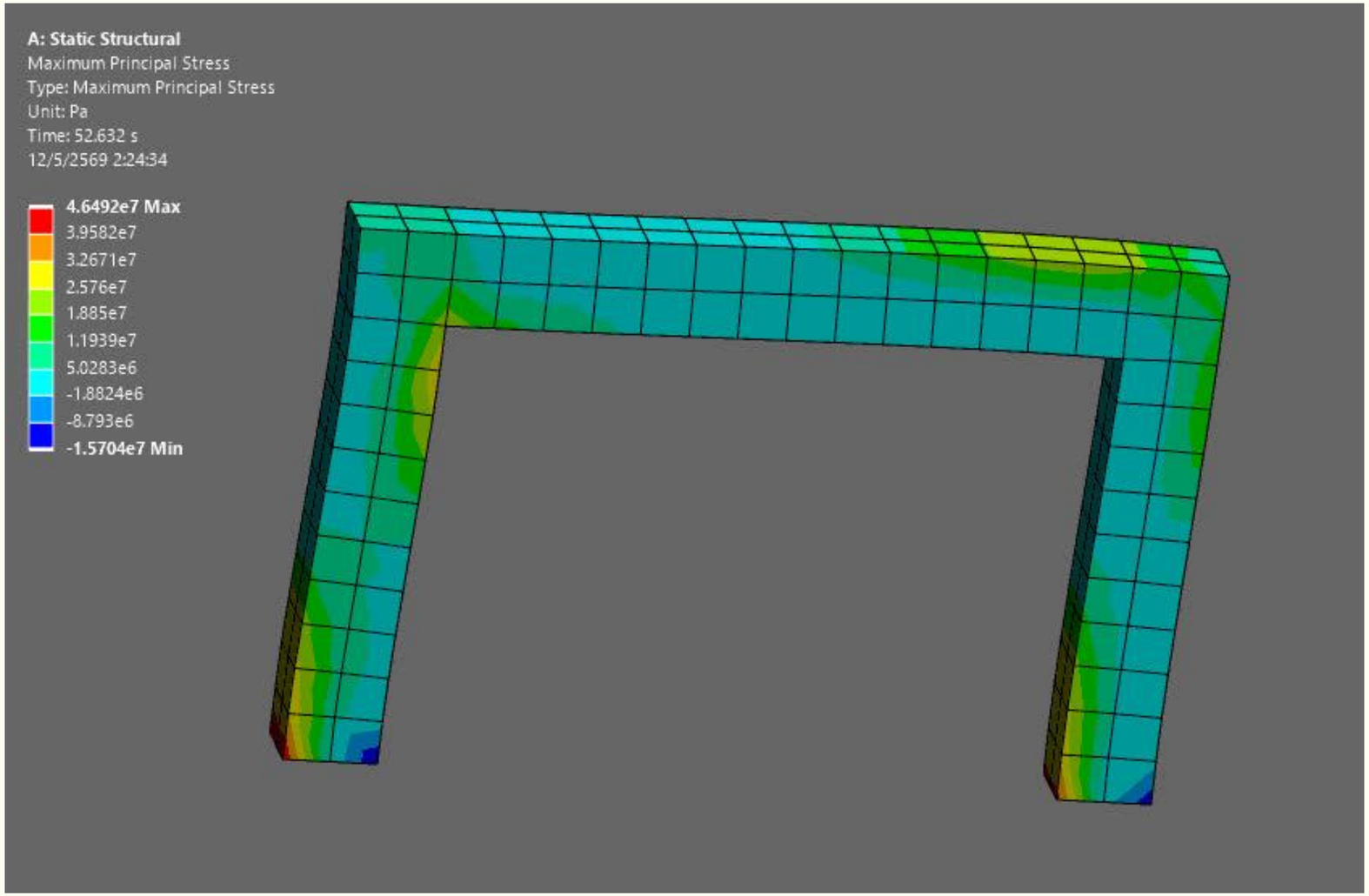

# RESULTS AND DISCUSSION

## STRESS

Both models indicated higher stresses near:

- the beam-column joints,
- fixed support regions at the base of the columns.

The stress distribution followed the expected bending behavior of the frame subjected to lateral displacement.

Differences in stress contour appearance may be attributed to:

- constitutive material modeling
- nonlinear integration algorithms.

# RESULTS AND DISCUSSION

| RESULTS | LOAD(kN) | STRESS (MPa) |
|---|---|---|
| MATLAB | 501.667 | 32.573 |
| Ansys | 506.13 | 51.131 |
| Percent Difference | 0.886% | 44.34% |

# CONCLUSION

- Highest stress concentrates at column bases and beam-column joints (as seen in ANSYS)
- Material stiffness degrades progressively from 30 GPa toward near-zero in damaged zones
- The progressive reduction in frame stiffness with each load step is observed from the flattening slope of the load-displacement curve.
- The model identifies where the frame softens most but cannot define a true failure point, as the material has no collapse criterion — unlike Hognestad, Kent-Park, or Concrete Damaged Plasticity (CDP) models which do

# PROGRAM UTILIZATION FOR DIFFERENT STRUCTURE

- Applicable to nonlinear 3D structural analysis using 8-node hexahedral elements.
- Suitable for analyzing portal frames, beam-column members, joints, and solid concrete components.
- Computes element-level strain, stress, tangent modulus, and stiffness degradation.
- Can study the effect of mesh density, boundary conditions, load distribution, and material parameters.
- Visualize deformed shape, stress contour, displacement history, and load–displacement curve.

# THANK YOU